MaxMotion

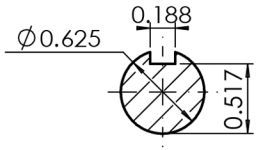

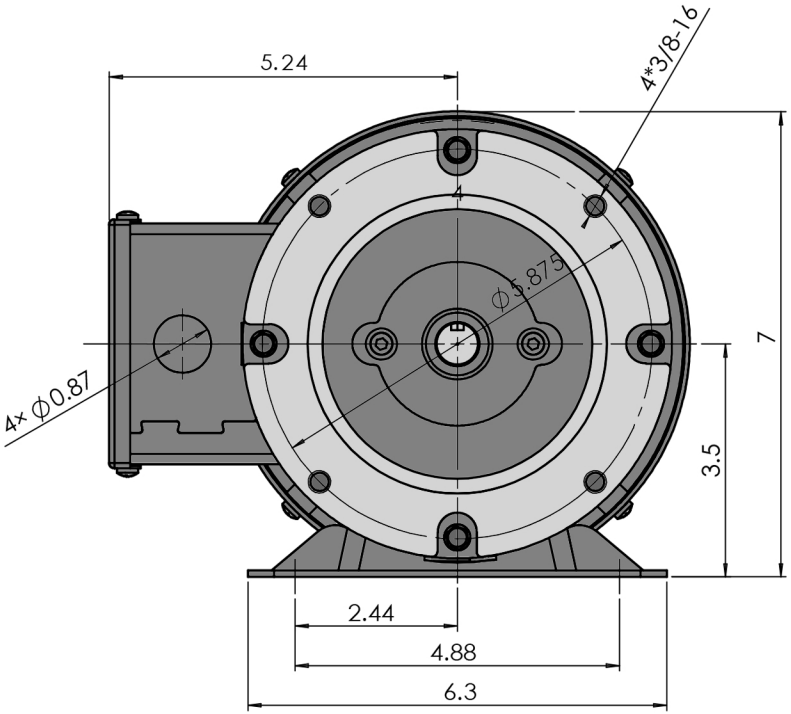

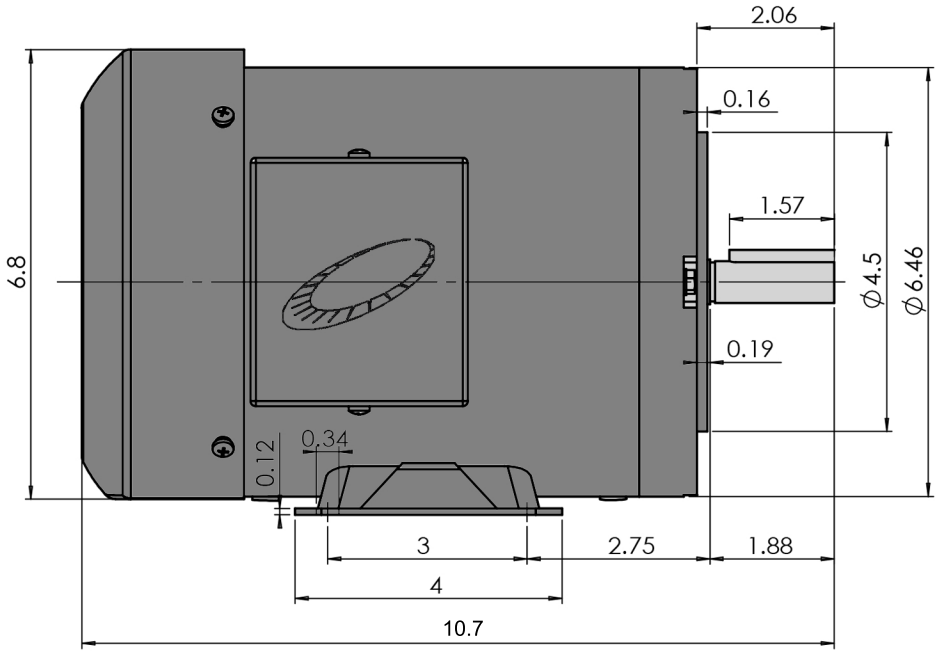

Version:2HUA	Revised: July 2020	HP	RPM	FRAME	ENCLOSURE
Customer is responsable in determining that MaxMotion product will fit/perform suitably in the intended application		3/4	3600	56C	TEFC

MPR-342CH